Revision History				
Rev	ECN #	Approved Date	Approved by	Notes
E1	N/A	N/A	GM	Original engineering release.
A	N/A	Oct. 17, 2024	GM	- Changed default boot mode to 11b - Changed C97 part number - Changed internal VREF connection on S3/S4 - Changed FSI connections on J5 - Removed tracking feature from U7 - Added soft start capacitor to U7 - Changed filtering scheme for ADC external reference
A	N/A	Oct. 20, 2025	GM	Updated notes in SOM power schematic; no functional change to EVM.

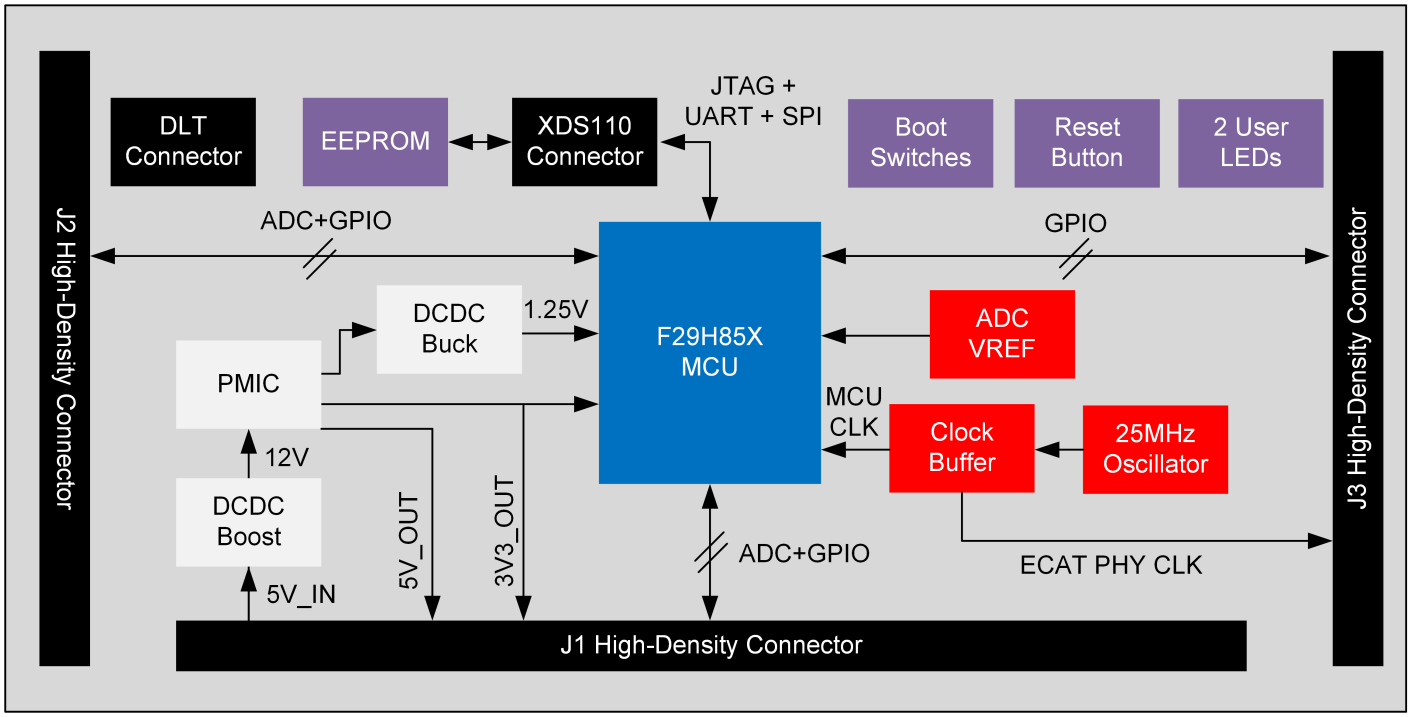

Texas Instruments and/or its licensors do not warrant the accuracy or completeness of this specification or any information contained therein. Texas Instruments and/or its licensors do not warrant that this design will meet the specifications, will be suitable for your application or fit for any particular purpose, or will operate in an implementation. Texas Instruments and/or its licensors do not warrant that the design is production worthy. You should completely validate and test your design implementation to confirm the system functionality for your application.

Orderable: F29H85X-SOM-EVM		Designed for: Public Release	Mod. Date: 10/20/2025
TID #: N/A		Project Title: F29H85x controlSOM EVM	
Number: MCU144	Rev: A	Sheet Title: Block Diagram	
SVN Rev: Version control disabled		Assembly Variant: 002	Sheet: 1 of 8
Drawn By: Gustavo Martinez		File: MCU144A_Coversheet.SchDoc	Size: B
Engineer: Gustavo Martinez		Contact: http://www.ti.com/support	

Texas Instruments
http://www.ti.com
© Texas Instruments 2024

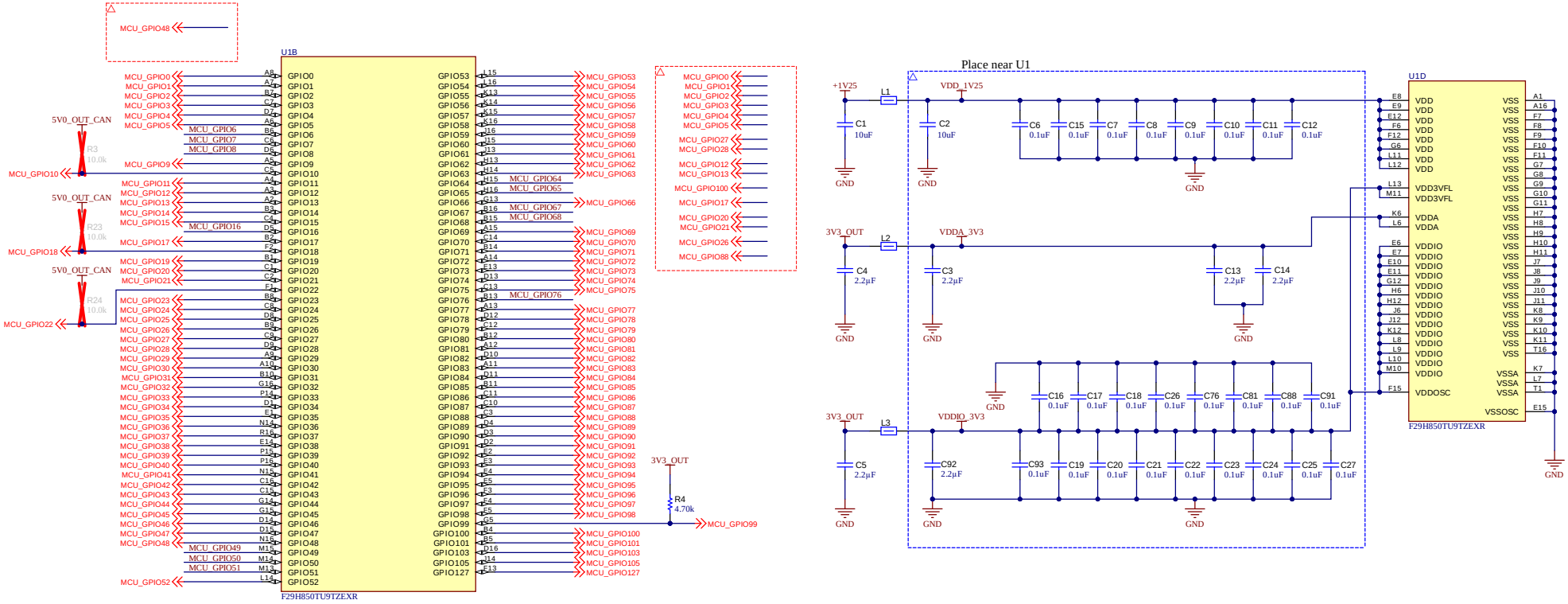

EtherCAT / MCAN-A Boot Selection

Mode	Resistor Configuration
EtherCAT support*	Populate R25/R27 and R29/R54 with 0-ohm resistor, remove R26/R45.
MCAN-A boot support	Populate R26/R45 with 0-ohm resistor, remove R25/R27 and R29/R54.

*Default

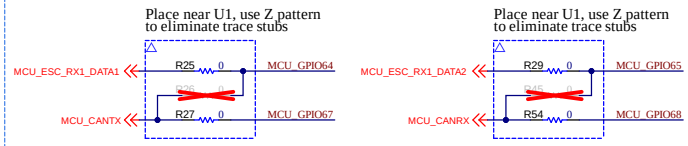

FSI Baseboard / DLT Selection

Mode	Resistor Configuration
Baseboard support*	Populate all 0-ohm resistors on SOM_GPIO nets. Remove all resistors on DLT_GPIO nets.
DLT support	Populate all 0-ohm resistors on DLT_GPIO nets. Remove all resistors on SOM_GPIO nets.

*Default

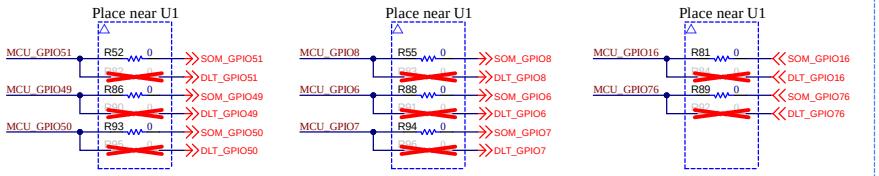

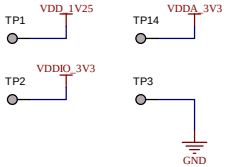

Orderable: F29H85X-SOM-EVM	Designed for: Public Release	Mod. Date: 10/8/2026	
TID #: N/A	Project Title: F29H85x controlSOM EVM		
Number: MCU144 Rev: A	Sheet Title: GPIO and Power		
SVN Rev: Version control disabled	Assembly Variant: 002	Sheet: 2 of 8	
Drawn By: Gustavo Martinez	File: MCU144A_GPIO_Power.SchDoc	Size: B	
Engineer: Gustavo Martinez	Contact: http://www.ti.com/support		

Texas Instruments and/or its licensors do not warrant the accuracy or completeness of this specification or any information contained therein. Texas Instruments and/or its licensors do not warrant that this design will meet the specifications, will be suitable for your application or fit for any particular purpose, or will operate in an implementation. Texas Instruments and/or its licensors do not warrant that the design is production worthy. You should completely validate and test your design implementation to confirm the system functionality for your application.

Texas Instruments
http://www.ti.com
© Texas Instruments 2024

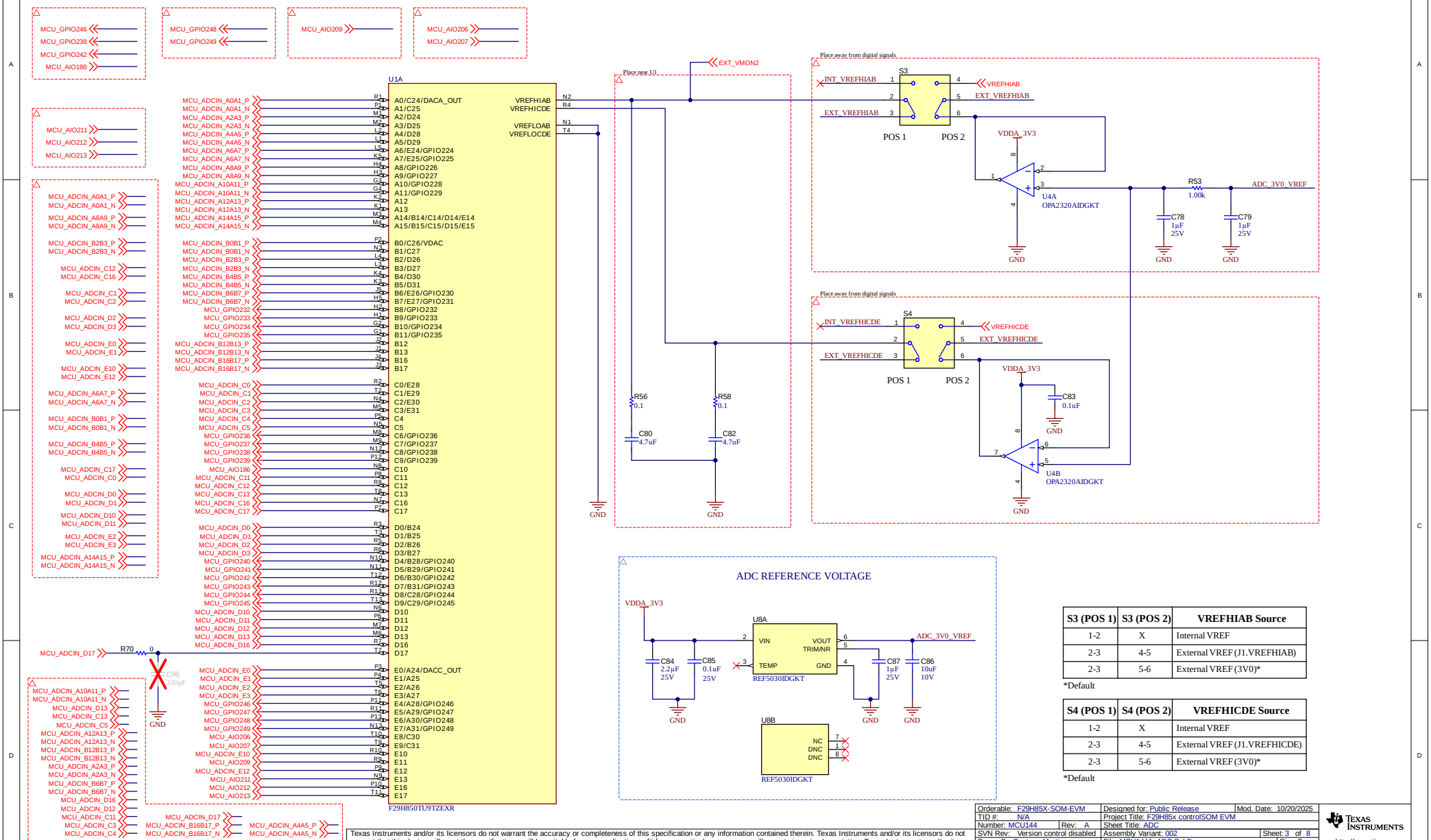

S3 (POS 1)	S3 (POS 2)	VREFHIAB Source
1-2	X	Internal VREF
2-3	4-5	External VREF (J1.VREFHIAB)
2-3	5-6	External VREF (3V0)*

*Default

S4 (POS 1)	S4 (POS 2)	VREFHICDE Source
1-2	X	Internal VREF
2-3	4-5	External VREF (J1.VREFHICDE)
2-3	5-6	External VREF (3V0)*

*Default

Texas Instruments and/or its licensors do not warrant the accuracy or completeness of this specification or any information contained therein. Texas Instruments and/or its licensors do not warrant that this design will meet the specifications, will be suitable for your application or fit for any particular purpose, or will operate in an implementation. Texas Instruments and/or its licensors do not warrant that the design is production worthy. You should completely validate and test your design implementation to confirm the system functionality for your application.

Orderable: F29H85X-SOM-EVM	Designed for: Public Release	Mod. Date: 10/20/2025
TID #: N/A	Project Title: F29H85x controlSOM EVM	
Number: MCU144 Rev: A	Sheet Title: ADC	
SVN Rev: Version control disabled	Assembly Variant: 002	Sheet: 3 of 8
Drawn By: Gustavo Martinez	File: MCU144A_ADC.SchDoc	Size: B
Engineer: Gustavo Martinez	Contact: http://www.ti.com/support	

Texas Instruments
http://www.ti.com
© Texas Instruments 2024

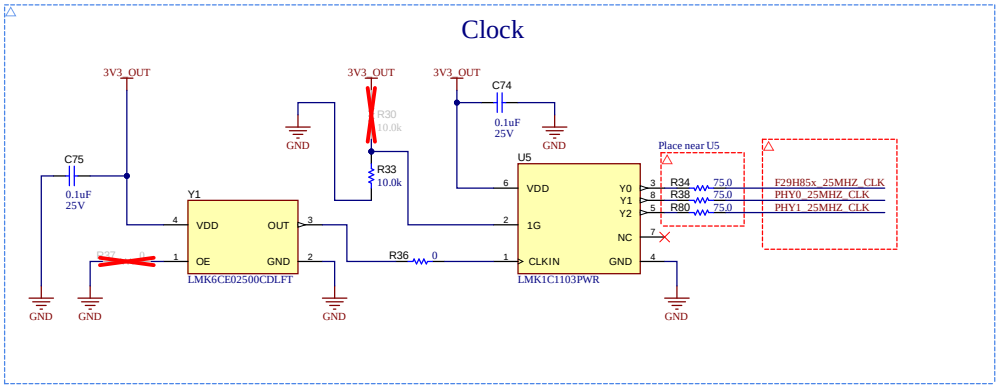

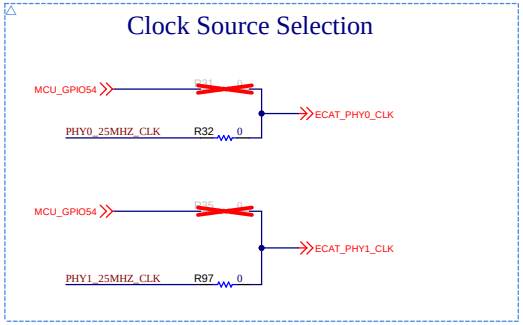

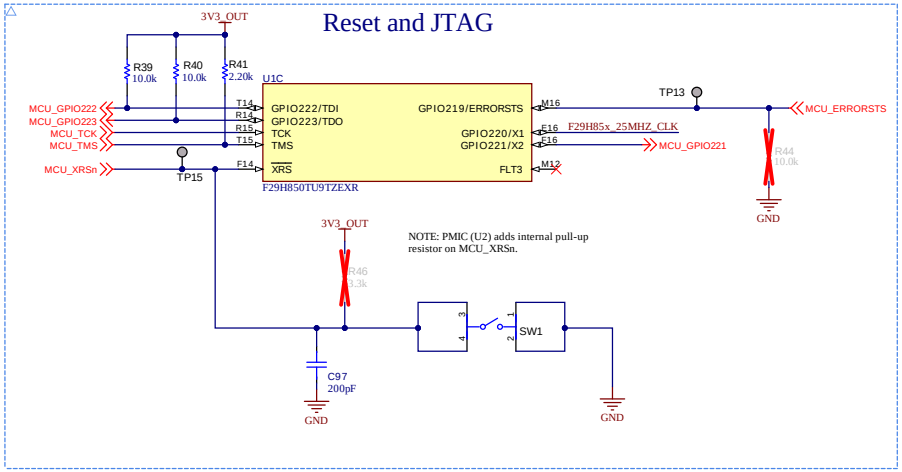

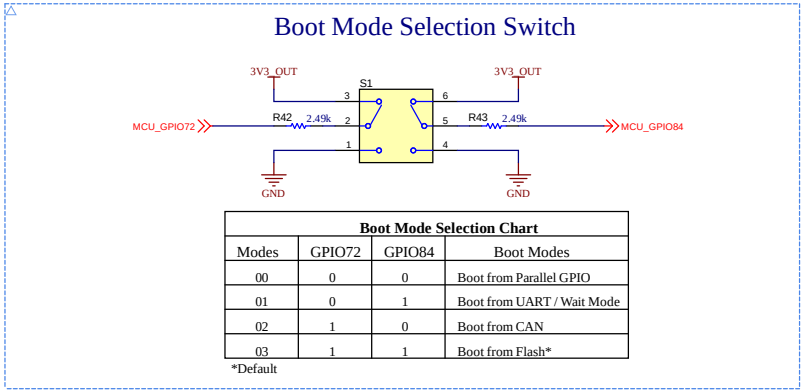

Boot Mode Selection Chart

Modes	GPIO72	GPIO84	Boot Modes
00	0	0	Boot from Parallel GPIO
01	0	1	Boot from UART / Wait Mode
02	1	0	Boot from CAN
03	1	1	Boot from Flash*

*Default

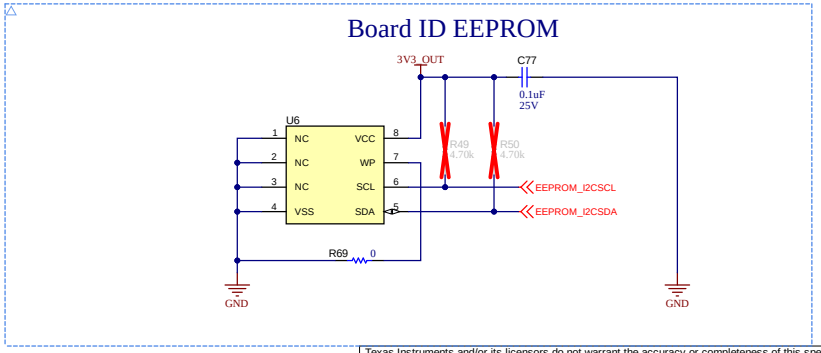

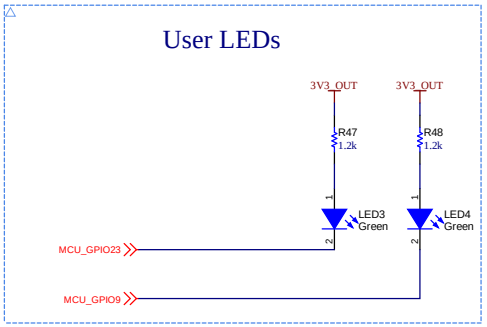

Texas Instruments and/or its licensors do not warrant the accuracy or completeness of this specification or any information contained therein. Texas Instruments and/or its licensors do not warrant that this design will meet the specifications, will be suitable for your application or fit for any particular purpose, or will operate in an implementation. Texas Instruments and/or its licensors do not warrant that the design is production worthy. You should completely validate and test your design implementation to confirm the system functionality for your application.

Orderable: F29H85X-SOM-EVM	Designed for: Public Release	Mod. Date: 10/20/2025	
TID #: N/A	Project Title: F29H85x controlSOM EVM		
Number: MCU144 Rev: A	Sheet Title: Clock, Reset, and Boot		
SVN Rev: Version control disabled	Assembly Variant: 002	Sheet: 4 of 8	
Drawn By: Gustavo Martinez	File: MCU144A_Clock_Reset_Boot.SchDoc	Size: B	
Engineer: Gustavo Martinez	Contact: http://www.ti.com/support		

Texas Instruments
http://www.ti.com
© Texas Instruments 2024

TPS653860 PMIC

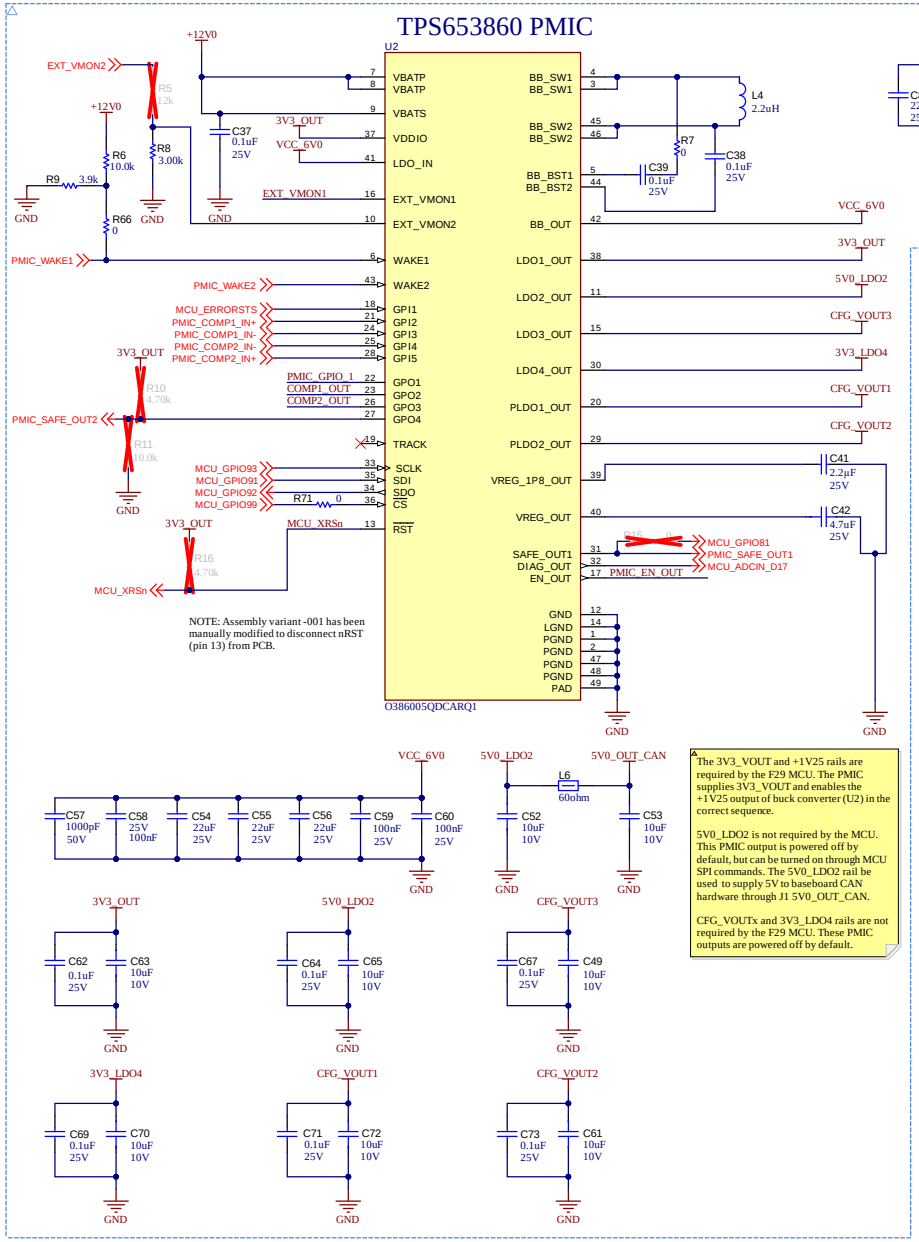

NOTE: Assembly variant -001 has been manually modified to disconnect nRST (pin 13) from PCB.

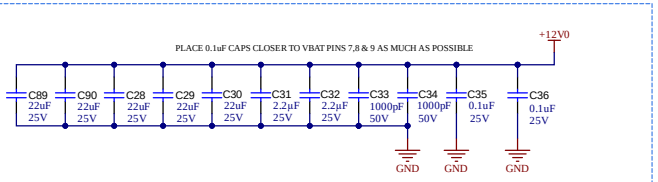

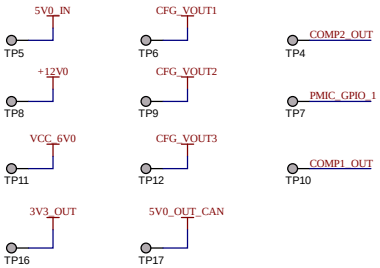

BOOST CONVERTER - 12V

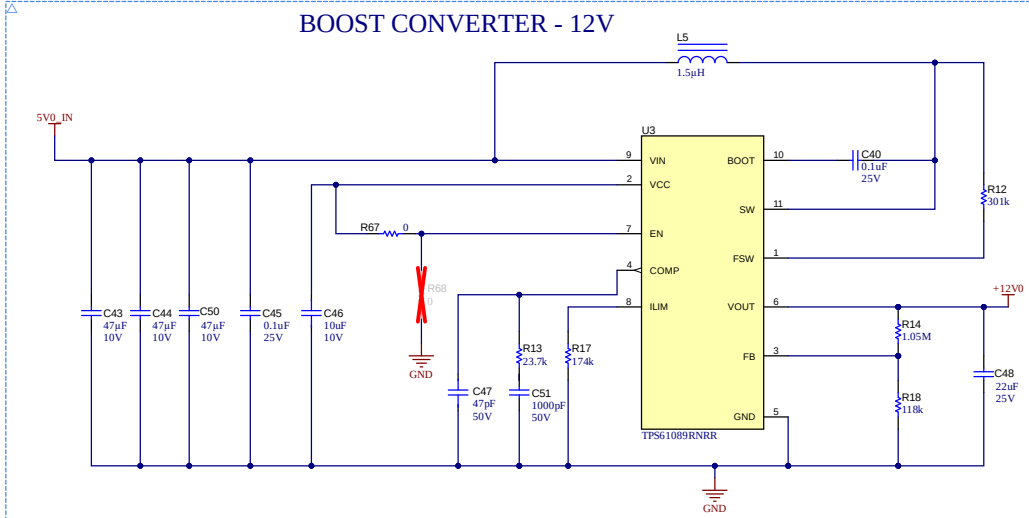

BUCK CONVERTER - 1V25

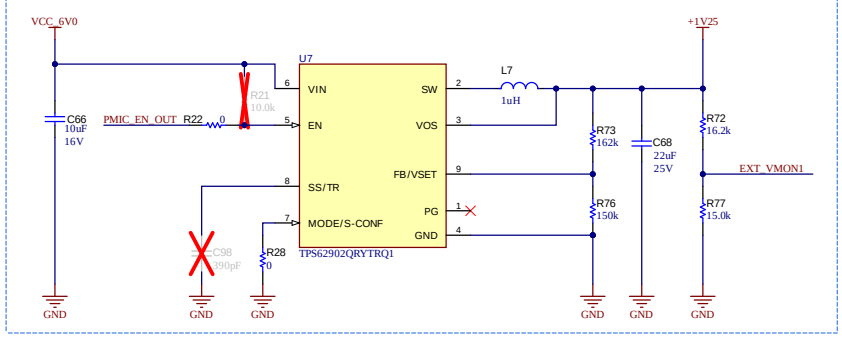

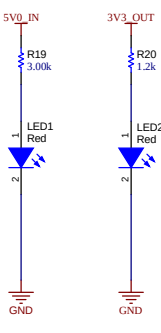

The 3V3_VOUT and +1V25 rails are required by the F29 MCU. The PMIC supplies 3V3_VOUT and enables the +1V25 output of buck converter (U2) in the correct sequence.

5V0_LDO2 is not required by the MCU. This PMIC output is powered off by default, but can be turned on through MCU SPI commands. The 5V0_LDO2 rail be used to supply 5V to baseboard CAN hardware through J1 5V0_OUT_CAN.

CFG_VOUTx and 3V3_LDO4 rails are not required by the F29 MCU. These PMIC outputs are powered off by default.

Texas Instruments and/or its licensors do not warrant the accuracy or completeness of this specification or any information contained therein. Texas Instruments and/or its licensors do not warrant that this design will meet the specifications, will be suitable for your application or fit for any particular purpose, or will operate in an implementation. Texas Instruments and/or its licensors do not warrant that the design is production worthy. You should completely validate and test your design implementation to confirm the system functionality for your application.

Orderable: F29H85X-SOM-EVM	Designed for: Public Release	Mod. Date: 10/30/2025	
TID #: N/A	Project Title: F29H85x controlSOM EVM		
Number: MCU144 Rev: A	Sheet Title: controlSOM Power		
SVN Rev: Version control disabled	Assembly Variant: 002	Sheet: 5 of 8	
Drawn By: Gustavo Martinez	File: MCU144A_SOM_Power.SchDoc	Size: B	
Engineer: Gustavo Martinez	Contact: http://www.ti.com/support		

Texas Instruments
http://www.ti.com

© Texas Instruments 2024

High Density Connector J1

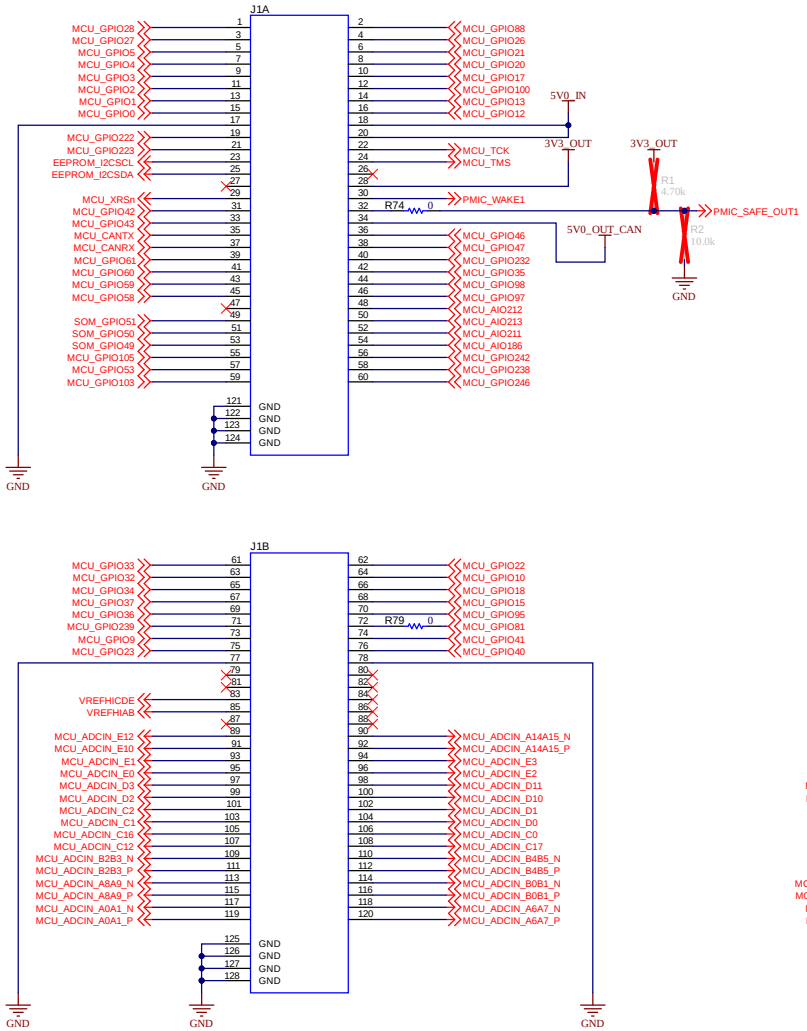

High Density Connector J2

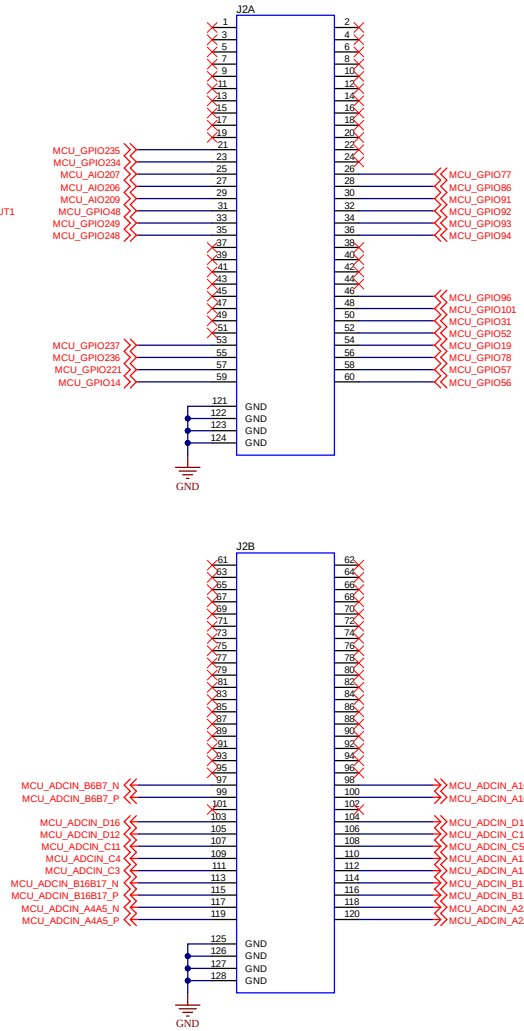

High Density Connector J3

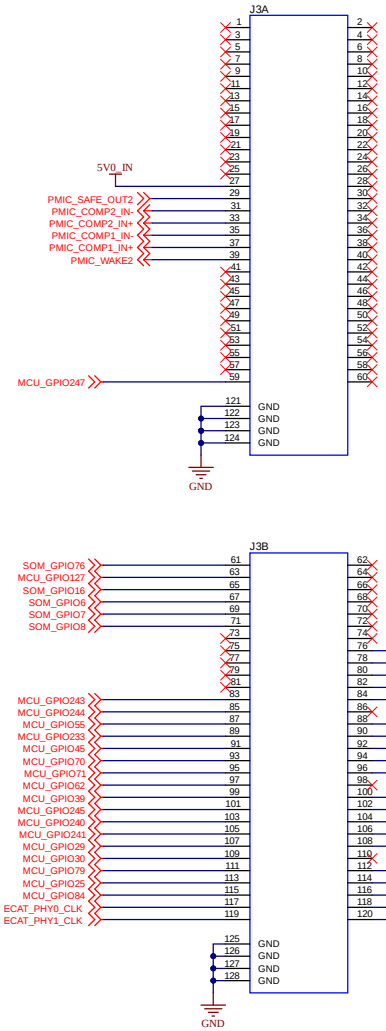

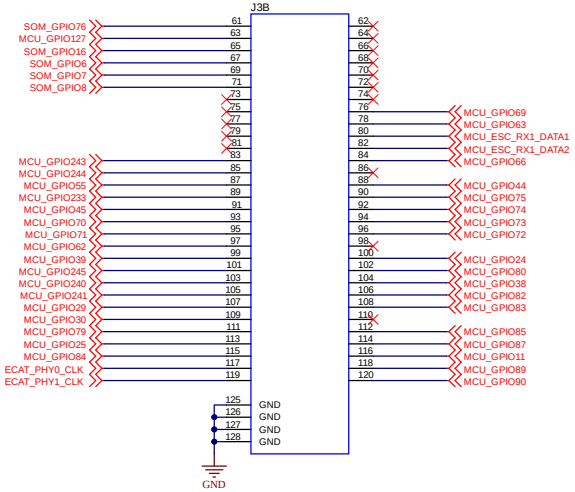

Texas Instruments and/or its licensors do not warrant the accuracy or completeness of this specification or any information contained therein. Texas Instruments and/or its licensors do not warrant that this design will meet the specifications, will be suitable for your application or fit for any particular purpose, or will operate in an implementation. Texas Instruments and/or its licensors do not warrant that the design is production worthy. You should completely validate and test your design implementation to confirm the system functionality for your application.

Orderable: F29H85X-SOM-EVM	Designed for: Public Release	Mod. Date: 7/1/2024	
TID #: N/A	Project Title: F29H85x controlSOM EVM		
Number: MCU144 Rev: A	Sheet Title: Baseboard Connectors		
SVN Rev: Version control disabled	Assembly Variant: 002	Sheet: 6 of 8	
Drawn By: Gustavo Martinez	File: MCU144A_Baseboard_Connectors.SchDoc	Size: B	
Engineer: Gustavo Martinez	Contact: http://www.ti.com/support		

Texas Instruments
http://www.ti.com

© Texas Instruments 2024

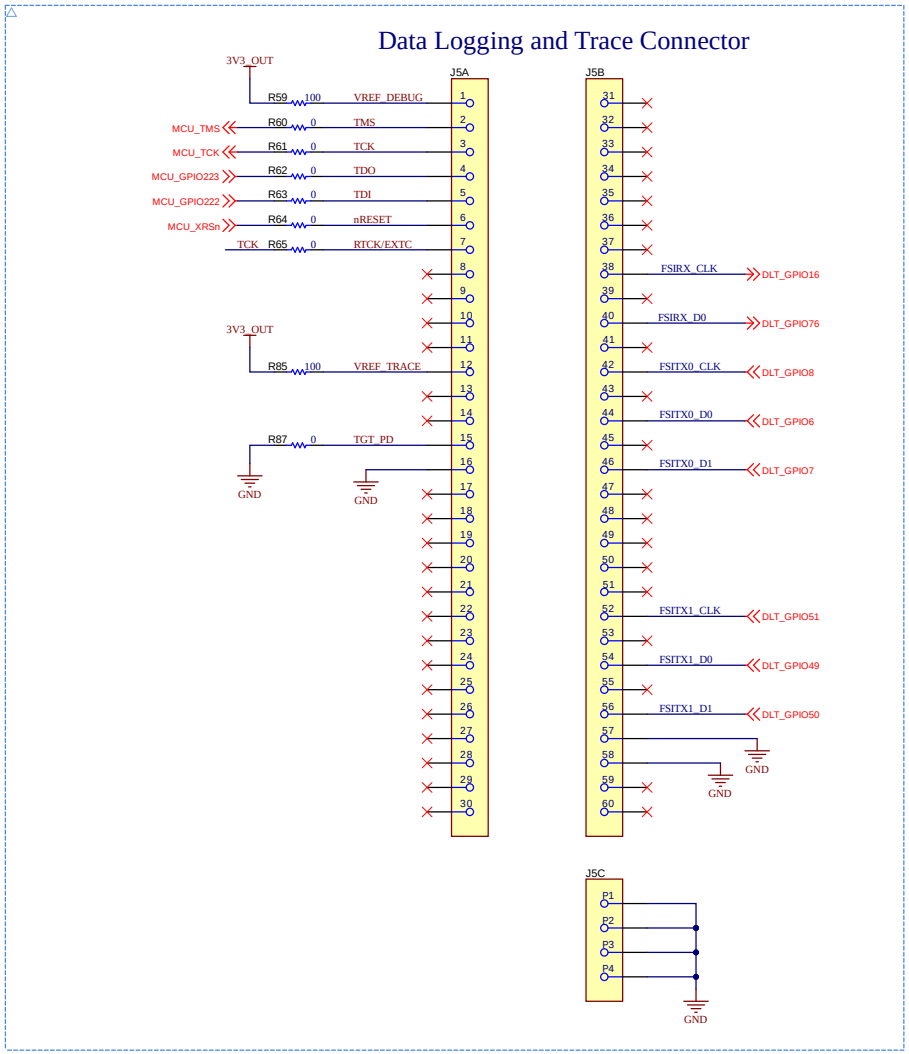

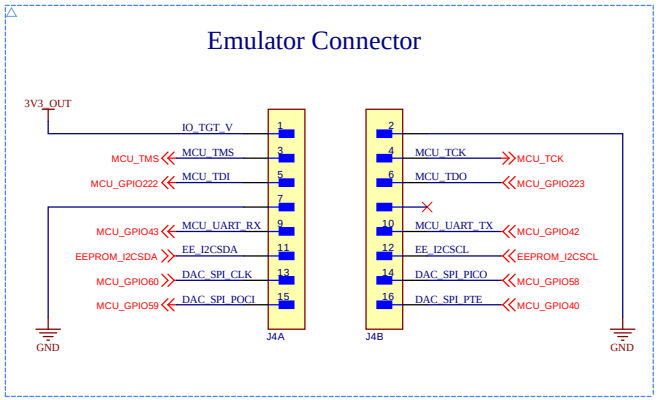

Texas Instruments and/or its licensors do not warrant the accuracy or completeness of this specification or any information contained therein. Texas Instruments and/or its licensors do not warrant that this design will meet the specifications, will be suitable for your application or fit for any particular purpose, or will operate in an implementation. Texas Instruments and/or its licensors do not warrant that the design is production worthy. You should completely validate and test your design implementation to confirm the system functionality for your application.

Orderable: F29H85X-SOM-EVM		Designed for: Public Release	Mod. Date: 10/23/2024
TID #: N/A		Project Title: F29H85x controlSOM EVM	
Number: MCU144	Rev: A	Sheet Title: Emulation Connectors	
SVN Rev: Version control disabled		Assembly Variant: 002	Sheet: 7 of 8
Drawn By: Gustavo Martinez		File: MCU144A_Emulation_Connectors.SchDoc	Size: B
Engineer: Gustavo Martinez		Contact: http://www.ti.com/support	

Texas Instruments
http://www.ti.com
© Texas Instruments 2024

FID1 FID2 FID3 FID4 FID5 FID6

PCB Number: MCU144
PCB Rev: A

PCB LOGO
Texas Instruments

CE Mark

PCB LOGO
FCC disclaimer

PCB LOGO
WEEE logo

MH1 MTG_NoPads
MH2 MTG_NoPads
MH3 MTG_NoPads
MH4 MTG_NoPads

Variant/Label Table	
Variant	Variant Description
001	25-MHz clock disabled; U2 NRST read-back disabled; see user guide for details.
002	25-MHz clock disabled; see user guide for details.
003	Full-feature
004	Full-feature with L1 alternate part

ZZ1
Label Assembly Note
This Assembly Note is for PCB labels only

ZZ2
Assembly Note
These assemblies are ESD sensitive, ESD precautions shall be observed.

ZZ3
Assembly Note
These assemblies must be clean and free from flux and all contaminants. Use of no clean flux is not acceptable.

ZZ4
Assembly Note
These assemblies must comply with workmanship standards IPC-A-610 Class 2, unless otherwise specified.

Texas Instruments and/or its licensors do not warrant the accuracy or completeness of this specification or any information contained therein. Texas Instruments and/or its licensors do not warrant that this design will meet the specifications, will be suitable for your application or fit for any particular purpose, or will operate in an implementation. Texas Instruments and/or its licensors do not warrant that the design is production worthy. You should completely validate and test your design implementation to confirm the system functionality for your application.

© Texas Instruments 2024